June 10

Work Order ID 59139

Wednesday, May 26, 2010 1:55:44 PM

Item ID: D4039-3 **Accept** **Setup Start**

Revision ID: **Stop**

Item Name: Aft Bracket

Start Date: 5/26/2010 **Start Qty:** 2.00 **Cust Item ID:**

Required Date: 6/4/2010 **Req'd Qty:** 2.00 **Customer:**

Reference:

POSITIVE RECALL

Approvals: **Process Plan:** N **Date:** 10-5-26 **Tooling:** **Date:** **Run Start**

QC: **Date:** **SPC (Y/N):** **Date:** **Stop**

Sequence ID/ Work Center ID	Operation Description	Set Up/ Run Hours	Tool ID	Tool #	Plan Code	Accept Qty	Reject Qty	Reject Number	Insp. Stamp
Draw Nbr	**Revision Nbr**								
D4039	~~A~~ ~~PB1~~ B 10-11-24							6-5	
100		0.00							
Waterjet	**Memo**	0.00				B 10-5-27			
FLOW CNC Waterjet	Cut blank as per file D4039-3_BLANK								2
110		0.00							
HAAS 1	**Memo**	0.00				2	0		
HAAS CNC vertical machine #1	MACHINE AS PER FOLI FA881 AND DWG FOLIO REV: AA DWG REV: A DEBURR								

mf 10/06/02

Dart Aerospace Ltd

W/O:		WORK ORDER CHANGES					
DATE	STEP	PROCEDURE CHANGE	By	Date	Qty	Approval Chief Eng / Prod Mgr	Approval QC Inspector

Part No: _____ PAR #: _____ Fault Category: _____ NCR: Yes No DQA: _____ Date: _____

Resolution: _____ Disposition: _____ QA: N/C Closed: _____ Date: _____

NCR:		WORK ORDER NON-CONFORMANCE (NCR)						
DATE	STEP	Description of NC Section A	Corrective Action Section B			Verification Section C	Approval Chief Eng	Approval QC Inspector
			Initial Chief Eng	Action Description Chief Eng	Sign & Date			

NOTE: Date & initial all entries

H:\fFORMS\Quality Assurance\approved QA\NCRWO RevE

Work Order ID 59139

Wednesday, May 26, 2010 1:55:44 PM

Item ID: D4039-3
Revision ID:
Item Name: Aft Bracket
Start Date: 5/26/2010 **Start Qty:** 2.00
Required Date: 6/4/2010 **Req'd Qty:** 2.00
Reference:

Accept

Setup Start
Stop

Cust Item ID:
Customer:

Approvals: **Process Plan:** _____ **Date:** _____ **Tooling:** _____ **Date:** _____
QC: _____ **Date:** _____ **SPC (Y/N):** _____ **Date:** _____

Run Start
Stop

Sequence ID/ Work Center ID	Operation Description	Set Up/ Run Hours	Tool ID	Tool #	Plan Code	Accept Qty	Reject Qty	Reject Number	Insp. Stamp
120	QC2- Inspect parts off machine FAI/FAIB	0.00							
QC	Memo	0.00	10/06/02			2	Ø		
Quality Control									
130	QC 8	0.00							
QC	Memo	0.00	10/06/02			2	Ø		
Quality Control									
140	Chemical Conversion Coat per QSI005 4.1	0.00							
HandFinish	Memo	0.00	=7 mil	10/06/07			2X		
Hand Finishing									

Dart Aerospace Ltd

W/O:		WORK ORDER CHANGES					
DATE	STEP	PROCEDURE CHANGE	By	Date	Qty	Approval Chief Eng / Prod Mgr	Approval QC Inspector

Part No: _____ PAR #: _____ Fault Category: _____ NCR: Yes No DQA: _____ Date: _____

Resolution: _____ Disposition: _____ QA: N/C Closed: _____ Date: _____

NCR:		WORK ORDER NON-CONFORMANCE (NCR)						
DATE	STEP	Description of NC Section A	Corrective Action Section B			Verification Section C	Approval Chief Eng	Approval QC Inspector
			Initial Chief Eng	Action Description Chief Eng	Sign & Date			

NOTE: Date & initial all entries

H:\fFORMS\Quality Assurance\approved QA\NCRWO RevE

Work Order ID 59139

Wednesday, May 26, 2010 1:55:44 PM

Item ID: D4039-3
Revision ID:
Item Name: Aft Bracket
Start Date: 5/26/2010 **Start Qty:** 2.00
Required Date: 6/4/2010 **Req'd Qty:** 2.00
Reference:

Accept

Setup Start
Stop

Cust Item ID:
Customer:

Approvals: **Process Plan:** _____ **Date:** _____ **Tooling:** _____ **Date:** _____
QC: _____ **Date:** _____ **SPC (Y/N):** _____ **Date:** _____

Run Start
Stop

Sequence ID/ Work Center ID	Operation Description	Set Up/ Run Hours	Tool ID	Tool #	Plan Code	Accept Qty	Reject Qty	Reject Number	Insp. Stamp
150	M11484 1								
Powdercoat	White Gloss(Ref:4.3.5.1) per QSI005 4.3-Alum	0.00				20			
Powder Coating	Memo START: 8:00AM TEMP: 320°F FIN: 8:30PM	0.00							
160	QC3- Inspect Part Finish	0.00							
QC	Memo	0.00							
Quality Control									
170	Identify as per dwg & Stock Location: 6-A	0.00							
Packaging	Memo	0.00							
Packaging									

10/06/08 10-6-8

10/06/09

Dart Aerospace Ltd

W/O:		WORK ORDER CHANGES					
DATE	STEP	PROCEDURE CHANGE	By	Date	Qty	Approval Chief Eng / Prod Mgr	Approval QC Inspector

Part No: _____ PAR #: _____ Fault Category: _____ NCR: Yes No DQA: _____ Date: _____

Resolution: _____ Disposition: _____ QA: N/C Closed: _____ Date: _____

NCR:		WORK ORDER NON-CONFORMANCE (NCR)						
DATE	STEP	Description of NC Section A	Corrective Action Section B			Verification Section C	Approval Chief Eng	Approval QC Inspector
			Initial Chief Eng	Action Description Chief Eng	Sign & Date			

NOTE: Date & initial all entries

H:\fFORMS\Quality Assurance\approved QA\NCRWO RevE

Work Order ID 59139

Wednesday, May 26, 2010 1:55:44 PM

Item ID: D4039-3
Revision ID: \
Item Name: Aft Bracket

Accept

Setup Start
Stop

Start Date: 5/26/2010 **Start Qty:** 2.00
Required Date: 6/4/2010 **Req'd Qty:** 2.00
Reference:

Cust Item ID:
Customer:

Approvals: **Process Plan:** _____ **Date:** _____ **Tooling:** _____ **Date:** _____
QC: _____ **Date:** _____ **SPC (Y/N):** _____ **Date:** _____

Run Start
Stop

Sequence ID/ Work Center ID	Operation Description	Set Up/ Run Hours	Tool ID	Tool #	Plan Code	Accept Qty	Reject Qty	Reject Number	Insp. Stamp
180	QC21- Final Inspection - Work Order Release	0.00							
QC Quality Control	**Memo**	0.00					10/11/24		

MF
10-6-9

POSITIVE RECALL
EFFECTIVE 10/16/02 AUTH
RELEASED DATE 10.11.24

Dart Aerospace Ltd

W/O:		WORK ORDER CHANGES					
DATE	STEP	PROCEDURE CHANGE	By	Date	Qty	Approval Chief Eng / Prod Mgr	Approval QC Inspector

Part No: _____ PAR #: _____ Fault Category: _____ NCR: Yes No DQA: _____ Date: _____

Resolution: _____ Disposition: _____ QA: N/C Closed: _____ Date: _____

NCR:		WORK ORDER NON-CONFORMANCE (NCR)						
DATE	STEP	Description of NC Section A	Corrective Action Section B			Verification Section C	Approval Chief Eng	Approval QC Inspector
			Initial Chief Eng	Action Description Chief Eng	Sign & Date			

NOTE: Date & initial all entries

H:\fFORMS\Quality Assurance\approved QA\NCRWO RevE

Picklist Print

Wednesday, May 26, 2010 1:55:48 PM

Work Order ID: 59139

Parent Item: D4039-3

Parent Item Name: Aft Bracket

Comments: Ipp Rev:A New Issue 09-12-15 JLM Verified By:EC

Start Date: 5/26/2010 **Required Date:** 6/4/2010

Start Qty: 2.00 **Required Qty:** 2.00

Component Item ID/ Item Name	Replacement Item ID	Mfg/ Purch	Bin Item	Primary Location	Last Location	Route Seq ID	Unit of Measure	Qty on Hand	Qty per Kit	Total Qty	Qty Issued	Date Issued	Status
M6061T6B1.000X15.000		Purchased	No			100	f	23.3000	3	6.315789			

6061-T6 Bar 1.00 x 15.00

HB10-5-27

Location		Loc Qty	Loc Code
MAT		16.8	
	114562	16.8	
MAT07		6.5	
	9544	6.5	

114562

2

Dart Aerospace Ltd

W/O:		WORK ORDER CHANGES					
DATE	STEP	PROCEDURE CHANGE	By	Date	Qty	Approval Chief Eng / Prod Mgr	Approval QC Inspector

Part No: _____ PAR #: _____ Fault Category: _____ NCR: Yes No DQA: _____ Date: _____

Resolution: _____ Disposition: _____ QA: N/C Closed: _____ Date: _____

NCR:		WORK ORDER NON-CONFORMANCE (NCR)						
DATE	STEP	Description of NC Section A	Corrective Action Section B			Verification Section C	Approval Chief Eng	Approval QC Inspector
			Initial Chief Eng	Action Description Chief Eng	Sign & Date			

NOTE: Date & initial all entries

H:\fFORMS\Quality Assurance\approved QA\NCRWO RevE

DART AEROSPACE LTD	Work Order:	59139
Description: ~~[illegible]~~ AFT BRACKET	Part Number:	D4039-3
Inspection Dwg: D4039 Rev: A		Page 1 of 1

FIRST ARTICLE INSPECTION CHECKLIST

[X] First Article [ ] Prototype

Drawing Dimension	Tolerance	Actual Dimension	Accept	Reject	Method of Inspection	Comments
4.00	±.030	4.000	—			
.19	±.020	.193	—			
R.13	±.030	R.125	—			
1.00	±.030	1.001	—			
.873	±.010	.874	—			
2.250	±.010	2.249	—			
~~[illegible]~~ .857	±.010	.866	—			
6.000	±.010	6.000	—			
Ø.391	+.006 −.001	Ø.396	—			
Ø.203	+.008 −.001	.205	—			
.200	±.010	.200	—			
Ø.261	+.005 −.001	Ø.263	—			
1.00	±.030	1.023	—			
.730	+.010 −.000	.736	—			
R.50	±.030	R.500	—			

Measured by:	[illegible]	Audited by:	[illegible]	Prototype Approval:	N/A
Date:	10/06/02	Date:	10/06/02	Date:	N/A

Rev	Date	Change	Revised by	Approved
A		New Issue	KJ/JLM	

ITEM NO.	QTY. -041	QTY. -043	PART NUMBER	DESCRIPTION
1	X		D4039-041	FWD BRACKET ASSEMBLY
2		X	D4039-043	AFT BRACKET ASSEMBLY
3	1		D4039-1	FWD BRACKET
4		1	D4039-3	AFT BRACKET
5	1	1	D2690-6	LANYARD
6	1	1	BLRS-010	PIP PIN
7	1	1	MS27039-1-11	SCREW
8	1	1	MS21042L3	NUT
9	3	3	NAS1149D0363J	WASHER

SHOP COPY
RETURN TO
ENGINEERING
UNCONTROLLED COPY
SUBJECT TO AMENDMENT
WITHOUT NOTICE
WORK ORDER
NO. 59139
BS 10-5-26

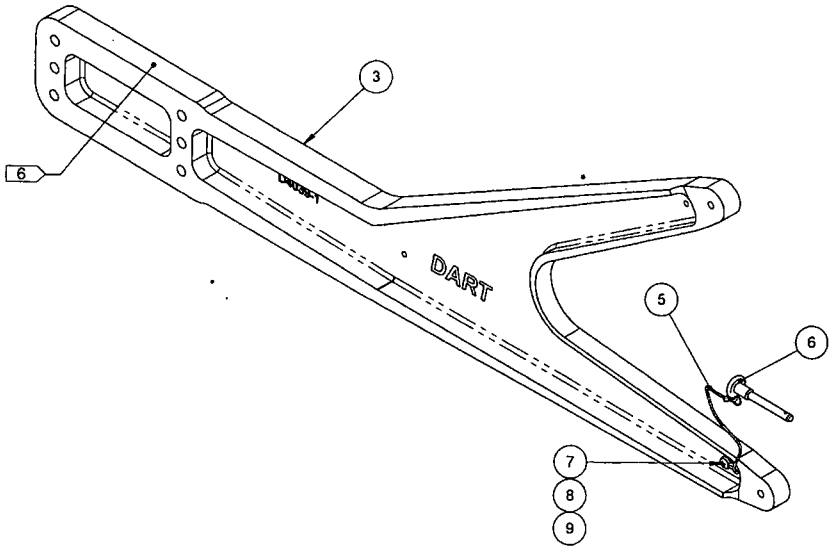

D4039-041 FWD BRACKET ASSEMBLY

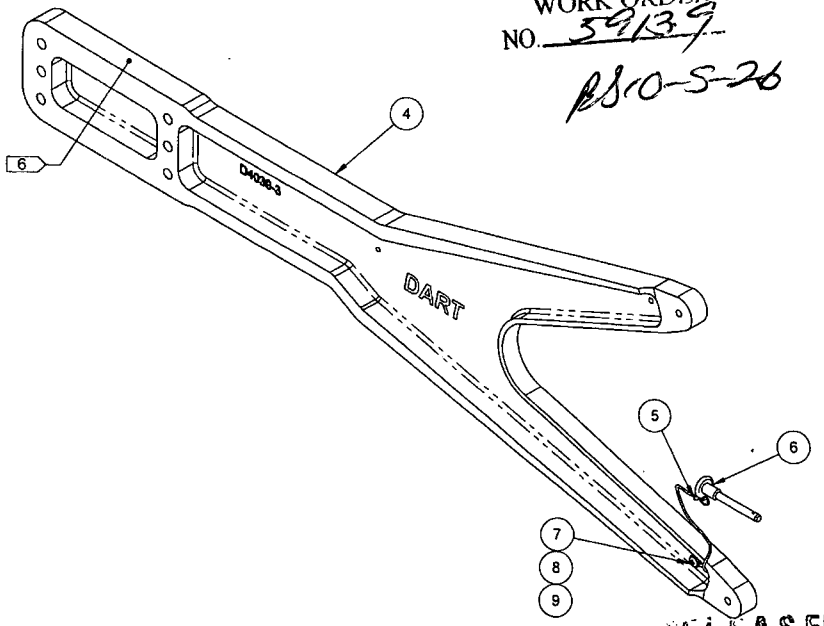

D4039-043 AFT BRACKET ASSEMBLY

RELEASED
2010 -04- 14

NOTES:
1) MATERIAL: N/A
2) FINISH: N/A
3) TOLERANCES: PER DART QSI 018 UNLESS OTHERWISE NOTED
4) UNITS: INCHES UNLESS OTHERWISE NOTED
5) BREAK SHARP EDGES: N/A
6) IDENTIFICATION: IDENTIFY WITH DART P/N "D4039-041/-043" AND B/N USING FINE POINT PERMANENT INK MARKER
7) WEIGHT: N/A

REV.	DESCRIPTION	BY	DATE
A	NEW ISSUE		09.12.14

DESIGN		DART AEROSPACE LTD HAWKESBURY, ONTARIO, CANADA	
DRAWN			
CHECKED		DRAWING NO. D4039	REV. A SHEET 1 OF 3
MFG. APPR.			
APPROVED		TITLE BRACKET	SCALE NTS
DE APPR.			
DATE	09.12.14		

Dart Aerospace Ltd

W/O:		WORK ORDER CHANGES					
DATE	STEP	PROCEDURE CHANGE	By	Date	Qty	Approval Chief Eng / Prod Mgr	Approval QC Inspector

Part No: _____ PAR #: _____ Fault Category: _____ NCR: Yes No DQA: _____ Date: _____

Resolution: _____ Disposition: _____ QA: N/C Closed: _____ Date: _____

NCR:		WORK ORDER NON-CONFORMANCE (NCR)						
DATE	STEP	Description of NC Section A	Corrective Action Section B			Verification Section C	Approval Chief Eng	Approval QC Inspector
			Initial Chief Eng	Action Description Chief Eng	Sign & Date			

NOTE: Date & initial all entries

H:\fFORMS\Quality Assurance\approved QA\NCRWO RevE

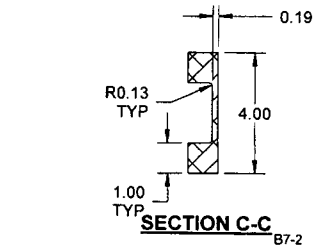

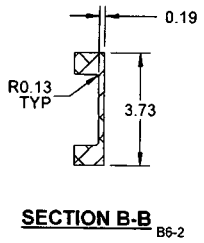

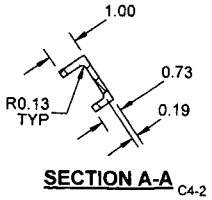

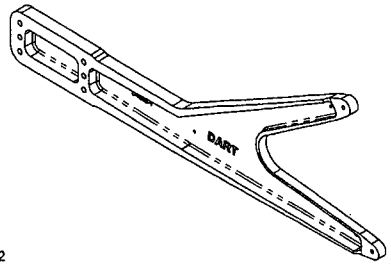

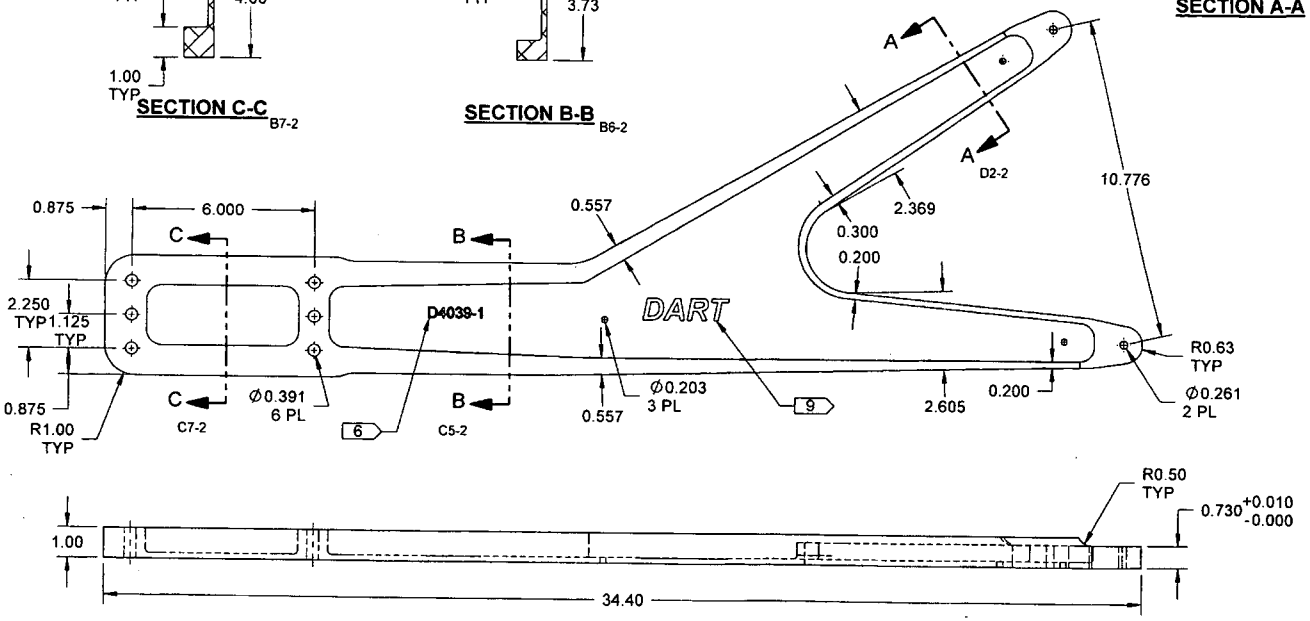

w/o 59139

D4039-1 FWD BRACKET

RELEASED
2010 -04- 16

NOTES:
1) MATERIAL: 6061-T6 (OR 6061-T62) ALUMINUM SHEET, 1.000 THICK
PER AMS-QQ-A-250/11 (OR AMS 4025/4027)
REF DART SPEC M6061T6S1.000
2) FINISH: CHEMICAL CONVERSION COAT PER DART QSI 005 4.1
POWDER COAT "WHITE" (4.3.5.1) PER DART QSI 005 4.3
3) TOLERANCES: PER DART QSI 018 UNLESS OTHERWISE NOTED
4) UNITS: INCHES UNLESS OTHERWISE NOTED
5) BREAK SHARP EDGES: 0.005 TO 0.010 MAX
6) IDENTIFICATION: ENGRAVE P/N AND BATCH NUMBER IN THIS AREA TO MAX
DEPTH OF 0.010 WITH MIN TOOL RADIUS OF 0.010
7) WEIGHT: 6.64 lbs
8) MACHINE PER DART SOLIDWORKS PART "D4039-1_REVA.SLDPRT"
9) ENGRAVE DART LOGO IN THIS AREA TO MAX DEPTH OF 0.015 WITH MIN TOOL RADIUS OF 0.250

DESIGN		DART AEROSPACE LTD HAWKESBURY, ONTARIO, CANADA
DRAWN		
CHECKED		DRAWING NO. D4039 — REV. A — SHEET 2 OF 3
MFG. APPR.		
APPROVED		TITLE: BRACKET — SCALE: NTS
DE APPR.		
DATE	09.12.14	

Dart Aerospace Ltd

W/O:		WORK ORDER CHANGES					
DATE	STEP	PROCEDURE CHANGE	By	Date	Qty	Approval Chief Eng / Prod Mgr	Approval QC Inspector

Part No: _____ PAR #: _____ Fault Category: _____ NCR: Yes No DQA: _____ Date: _____

Resolution: _____ Disposition: _____ QA: N/C Closed: _____ Date: _____

NCR:		WORK ORDER NON-CONFORMANCE (NCR)						
DATE	STEP	Description of NC Section A	Corrective Action Section B			Verification Section C	Approval Chief Eng	Approval QC Inspector
			Initial Chief Eng	Action Description Chief Eng	Sign & Date			

NOTE: Date & initial all entries

H:\fFORMS\Quality Assurance\approved QA\NCRWO RevE

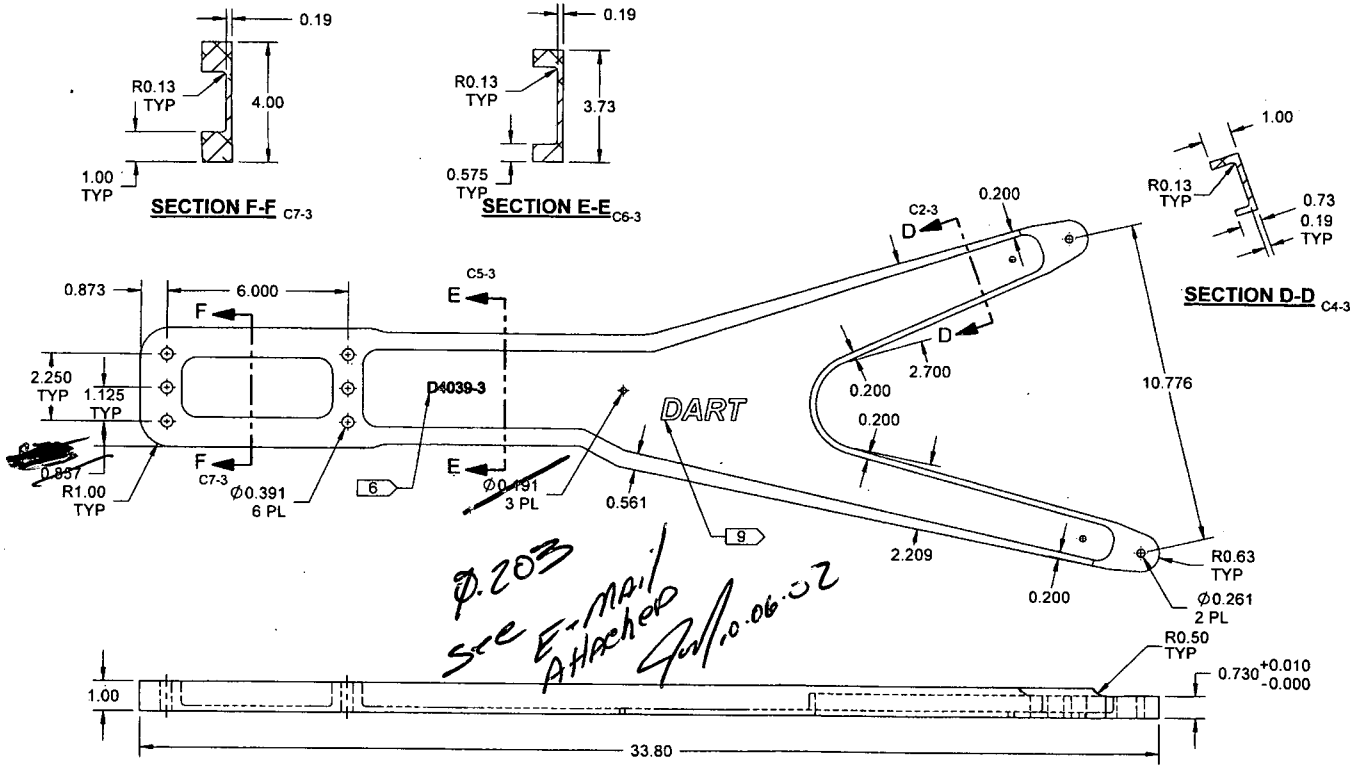

Ø.203
see E-mail Attached
Jul 10.06.02

wo 59139

D4039-3 FWD BRACKET

RELEASED
2010 -04- 14

NOTES:
1) MATERIAL: 6061-T6 (OR 6061-T62) ALUMINUM SHEET, 1.000 THICK
PER AMS-QQ-A-250/11 (OR AMS 4025/4027)
REF DART SPEC M6061T6S1.000
2) FINISH: CHEMICAL CONVERSION COAT PER DART QSI 005 4.1
POWDER COAT "WHITE" (4.3.5.1) PER DART QSI 005 4.3
3) TOLERANCES: PER DART QSI 018 UNLESS OTHERWISE NOTED
4) UNITS: INCHES UNLESS OTHERWISE NOTED
5) BREAK SHARP EDGES: 0.005 TO 0.010 MAX
6) IDENTIFICATION: ENGRAVE P/N AND BATCH NUMBER IN THIS AREA TO MAX
DEPTH OF 0.010 WITH MIN TOOL RADIUS OF 0.010
7) WEIGHT: 6.23 lbs
8) MACHINE PER DART SOLIDWORKS PART "D4039-3_REVA.SLDPRT"
9) ENGRAVE DART LOGO IN THIS AREA TO MAX DEPTH OF 0.015 WITH MIN TOOL RADIUS OF 0.250

DESIGN		DART AEROSPACE LTD HAWKESBURY, ONTARIO, CANADA
DRAWN		
CHECKED		DRAWING NO. D4039 — REV. A — SHEET 3 OF 3
MFG. APPR.		
APPROVED		TITLE: BRACKET — SCALE: NTS
DE APPR.		
DATE	09.12.14	

Dart Aerospace Ltd

W/O:		WORK ORDER CHANGES					
DATE	STEP	PROCEDURE CHANGE	By	Date	Qty	Approval Chief Eng / Prod Mgr	Approval QC Inspector

Part No: _____ **PAR #:** _____ **Fault Category:** _____ **NCR:** Yes No **DQA:** _____ **Date:** _____

Resolution: _____ **Disposition:** _____ **QA: N/C Closed:** _____ **Date:** _____

NCR:		WORK ORDER NON-CONFORMANCE (NCR)						
DATE	STEP	Description of NC Section A	Corrective Action Section B			Verification Section C	Approval Chief Eng	Approval QC Inspector
			Initial Chief Eng	Action Description Chief Eng	Sign & Date			

NOTE: Date & initial all entries

H:\fFORMS\Quality Assurance\approved QA\NCRWO RevE

Jean-Luc Menard

From: Harvey Siemens [hsiemens@dartaero.com]
Sent: April 28, 2010 11:27 AM
To: 'Jean-Luc Menard'; 'Mike Petsche'
Cc: 'Marc Bellavance'
Subject: RE: D4039 Rev. PB1

Thank you all for your quick reply. The rest of the paperwork will be coming your way shortly.

JL
I think that the hole that I dimensioned at 0.191 was the only hole in the model that was that size. Weird since the model is based on the "other" Y brackets.

Regards,

Harvey Siemens
Mechanical Designer
DART Aerospace Ltd.

P: 403-717-0328
F: 403-717-1288
E: hsiemens@dartaero.com
W: www.dartaero.com
M: 1060 McTavish Road NE, Calgary, Alberta, T2E 7G6

From: Jean-Luc Menard [mailto:jmenard@dartaero.com]
Sent: Wednesday, April 28, 2010 9:17 AM
To: 'Harvey Siemens'; 'Mike Petsche'
Cc: 'Marc Bellavance'
Subject: RE: D4039 Rev. PB1

Looks good,I don't know what happened, the original parts made in December were both drilled at .203"?????
As long as its fixed,
Thx
JLM

From: Harvey Siemens [mailto:hsiemens@dartaero.com]
Sent: April 28, 2010 11:11 AM
To: Mike Petsche
Cc: 'Marc Bellavance'; Jean-Luc Menard
Subject: D4039 Rev. PB1

Hey guys,

Talked with JL this morning and he raised an inconsistency between the D4039-1 and the -3 regarding the hole

sizes. This discrepancy has been corrected. Since you were the original reviewers, I am forwarding the prelim drawing to you. Thank you for your time in going over the attached drawing. Let me know if there are any other details that need to be changed or adjusted.

If everybody is good with it (let me know) I'll revise the MDL and issue an ECN. David will approve shortly after that and you'll have an updated drawing.

JL
Thought about Section A-A and D-D and the 0.73 dimension that is shown there vs the 0.730 +0.010/-0.000 dimension shown in zone B3. The B3 dimension is for the lug at the end while the section view dimension is just for that shorter leg of the beam. I think the way we have it dimensioned is correct. We want to maintain a tight tolerance on the lug but the shorter leg portion is not so critical. Let me know if that explanation doesn't make sense.

Regards,

Harvey Siemens
Mechanical Designer
DART Aerospace Ltd.

P: 403-717-0328
F: 403-717-1288
E: hsiemens@dartaero.com
W: www.dartaero.com
M: 1060 McTavish Road NE, Calgary, Alberta, T2E 7G6

ITEM NO.	QTY. -041	QTY. -043	PART NUMBER	DESCRIPTION
1	**X**		**D4039-041**	**FWD BRACKET ASSEMBLY**
2		**X**	**D4039-043**	**AFT BRACKET ASSEMBLY**
3	1		D4039-1	FWD BRACKET
4		1	D4039-3	AFT BRACKET
5	1	1	D2690-6	LANYARD
6	1	1	BLRS-010	PIP PIN
7	1	1	MS27039-1-11	SCREW
8	1	1	MS21042L05	NUT
9	3	3	NAS1149D0363J	WASHER

w/o 59139

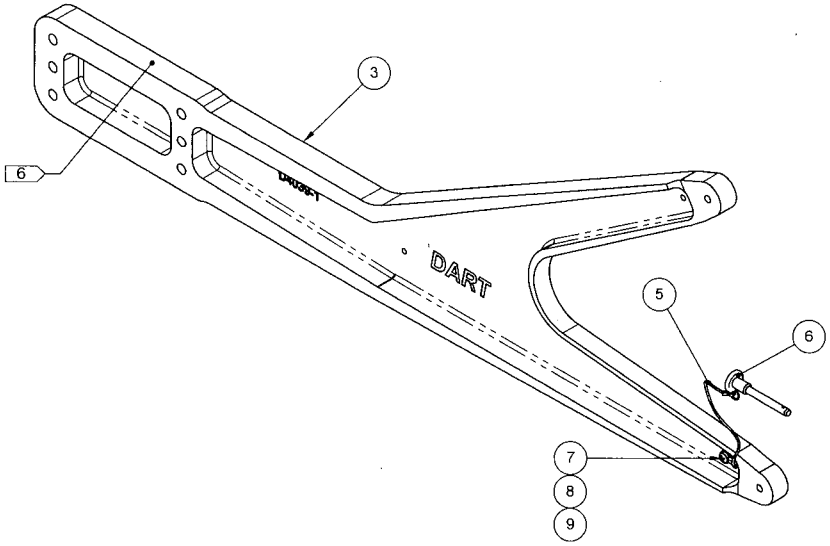

D4039-041 FWD BRACKET ASSEMBLY

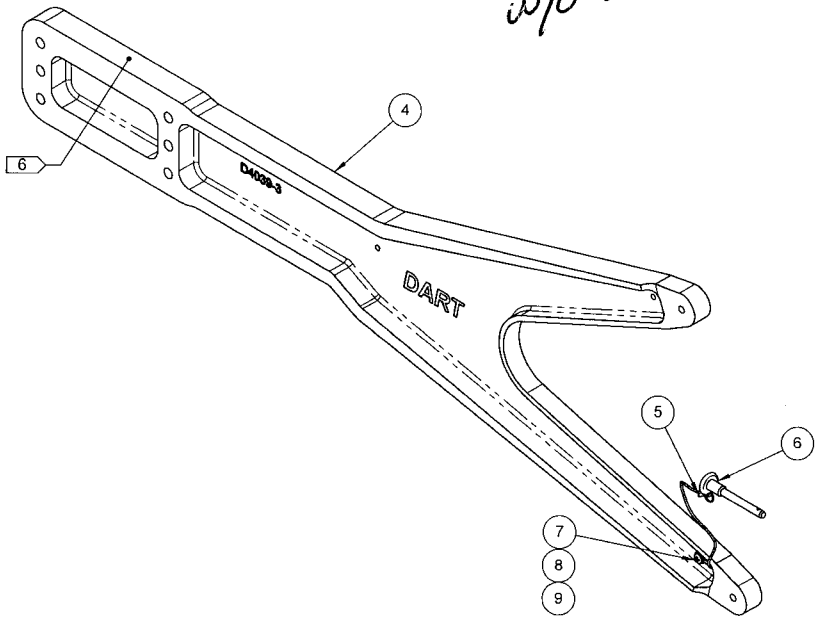

D4039-043 AFT BRACKET ASSEMBLY

NOTES:
1) MATERIAL: N/A
2) FINISH: N/A
3) TOLERANCES: PER DART QSI 018 UNLESS OTHERWISE NOTED
4) UNITS: INCHES UNLESS OTHERWISE NOTED
5) BREAK SHARP EDGES: N/A
6) IDENTIFICATION: IDENTIFY WITH DART P/N "D4039-041/-043" AND B/N USING FINE POINT PERMANENT INK MARKER
7) WEIGHT: N/A

PRELIMINARY ISSUE
10.04.28

REV.	DESCRIPTION	BY	DATE
PB1	REVISE HOLE SIZE ON D4039-3 FROM 0.191 TO 0.203, ZN B6-3		10.04.28
A	NEW ISSUE	HS	09.12.14

DESIGN		**DART AEROSPACE LTD** HAWKESBURY, ONTARIO, CANADA	
DRAWN			
CHECKED		DRAWING NO. D4039	REV. PB1
MFG. APPR.			SHEET 1 OF 3
APPROVED		TITLE BRACKET	SCALE NTS
DE APPR.			
DATE	10.04.28		

w/059139

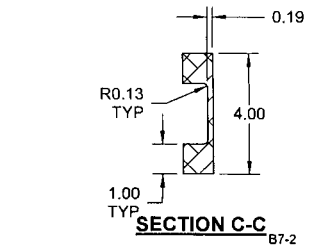

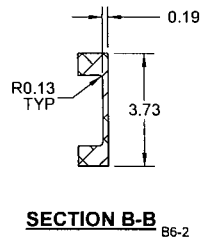

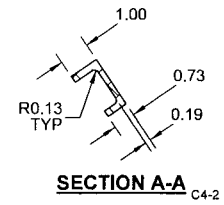

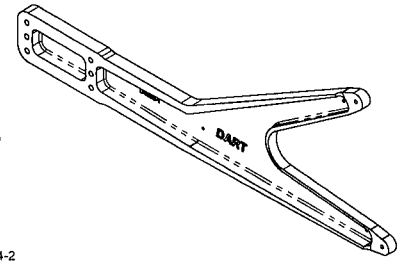

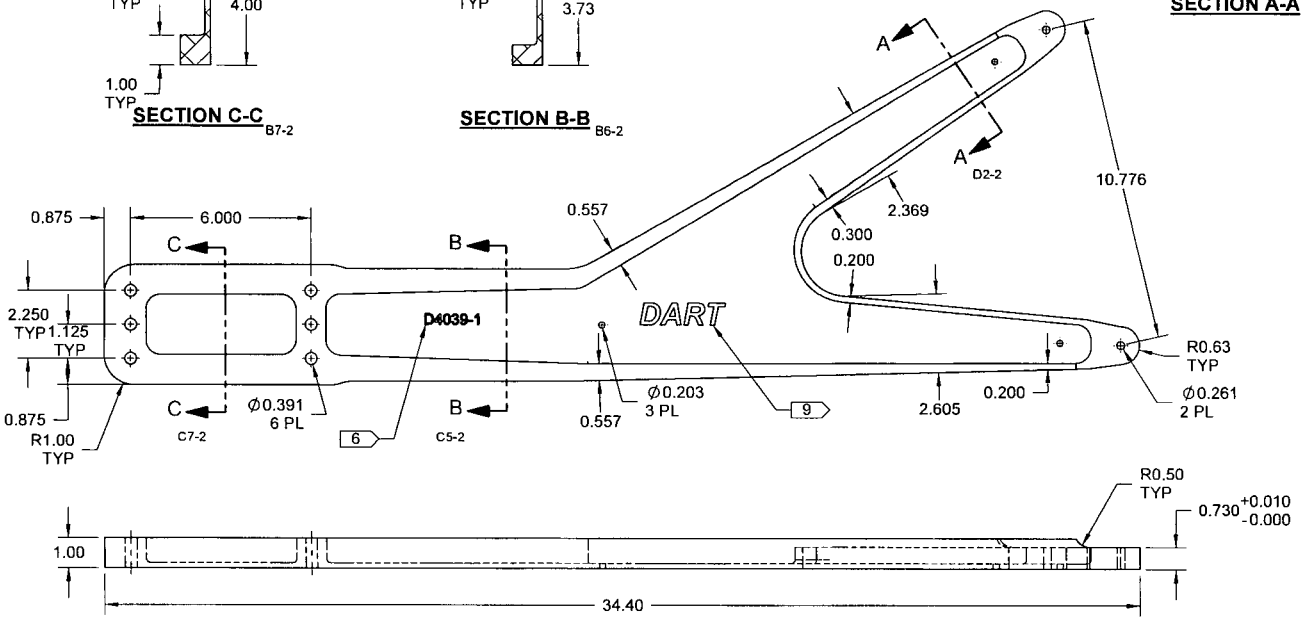

D4039-1 FWD BRACKET

NOTES:
1) MATERIAL: 6061-T6 (OR 6061-T62) ALUMINUM SHEET, 1.000 THICK
PER AMS-QQ-A-250/11 (OR AMS 4025/4027)
REF DART SPEC M6061T6S1.000
2) FINISH: CHEMICAL CONVERSION COAT PER DART QSI 005 4.1
POWDER COAT "WHITE" (4.3.5.1) PER DART QSI 005 4.3
3) TOLERANCES: PER DART QSI 018 UNLESS OTHERWISE NOTED
4) UNITS: INCHES UNLESS OTHERWISE NOTED
5) BREAK SHARP EDGES: 0.005 TO 0.010 MAX
6) IDENTIFICATION: ENGRAVE P/N AND BATCH NUMBER IN THIS AREA TO MAX
DEPTH OF 0.010 WITH MIN TOOL RADIUS OF 0.010
7) WEIGHT: 6.64 lbs
8) MACHINE PER DART SOLIDWORKS PART "D4039-1_REVA.SLDPRT"
9) ENGRAVE DART LOGO IN THIS AREA TO MAX DEPTH OF 0.015 WITH MIN TOOL RADIUS OF 0.250

PRELIMINARY ISSUE
10.04.28

DESIGN		**DART AEROSPACE LTD** HAWKESBURY, ONTARIO, CANADA
DRAWN		
CHECKED		DRAWING NO. D4039 — REV. PB1 — SHEET 2 OF 3
MFG. APPR.		
APPROVED		TITLE: BRACKET — SCALE: NTS
DE APPR.		
DATE	10.04.28	

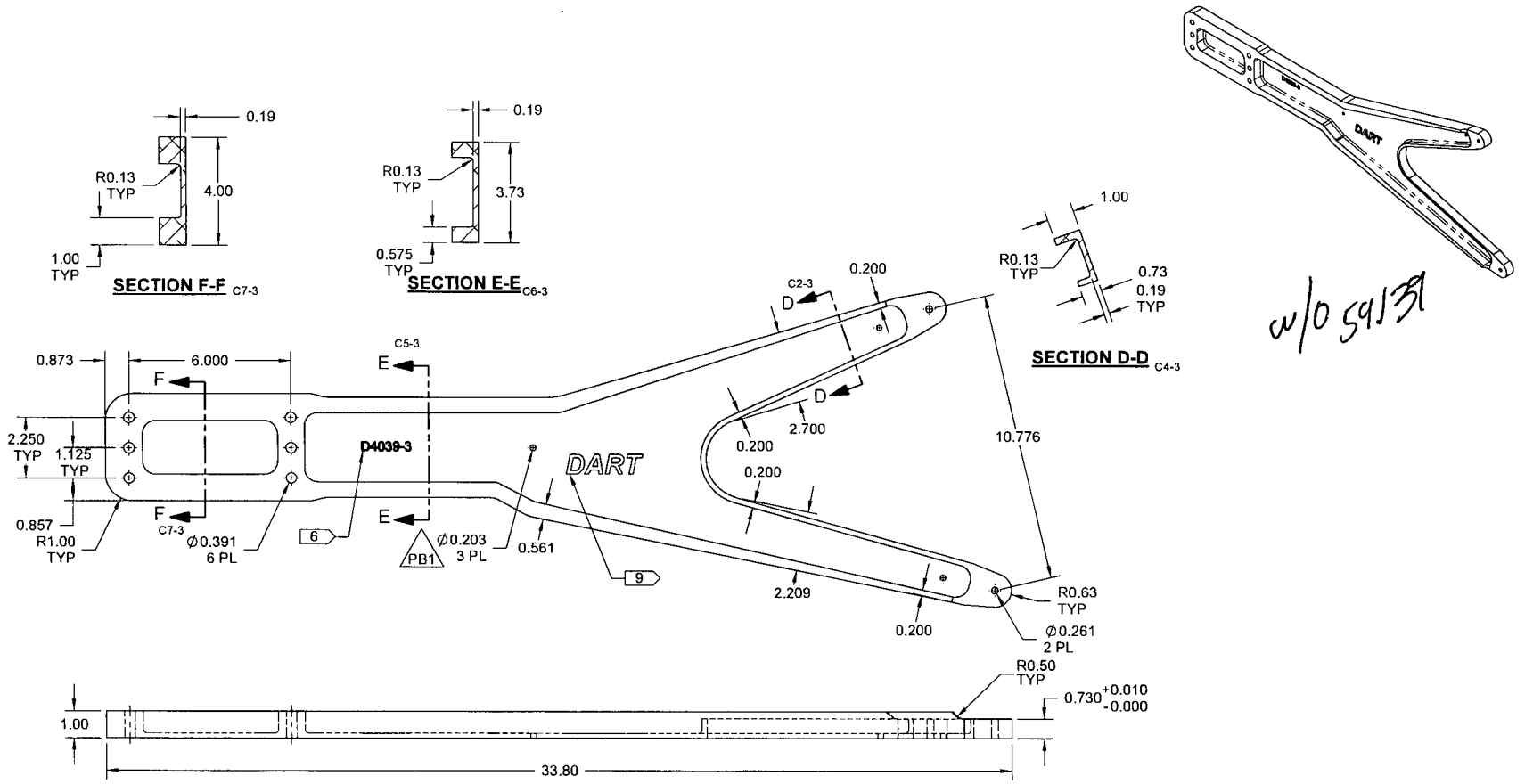

w/o 59139

D4039-3 FWD BRACKET

NOTES:
1) MATERIAL: 6061-T6 (OR 6061-T62) ALUMINUM SHEET, 1.000 THICK
PER AMS-QQ-A-250/11 (OR AMS 4025/4027)
REF DART SPEC M6061T6S1.000
2) FINISH: CHEMICAL CONVERSION COAT PER DART QSI 005 4.1
POWDER COAT "WHITE" (4.3.5.1) PER DART QSI 005 4.3
3) TOLERANCES: PER DART QSI 018 UNLESS OTHERWISE NOTED
4) UNITS: INCHES UNLESS OTHERWISE NOTED
5) BREAK SHARP EDGES: 0.005 TO 0.010 MAX
6) IDENTIFICATION: ENGRAVE P/N AND BATCH NUMBER IN THIS AREA TO MAX
DEPTH OF 0.010 WITH MIN TOOL RADIUS OF 0.010
7) WEIGHT: 6.23 lbs
8) MACHINE PER DART SOLIDWORKS PART "D4039-3_REVA.SLDPRT"
9) ENGRAVE DART LOGO IN THIS AREA TO MAX DEPTH OF 0.015 WITH MIN TOOL RADIUS OF 0.250

PRELIMINARY ISSUE
10.04.28

DESIGN		**DART AEROSPACE LTD** HAWKESBURY, ONTARIO, CANADA
DRAWN		DRAWING NO. D4039 — REV. PB1 — SHEET 3 OF 3
CHECKED		TITLE: BRACKET — SCALE: NTS
MFG. APPR.		
APPROVED		
DE APPR.		
DATE	10.04.28	

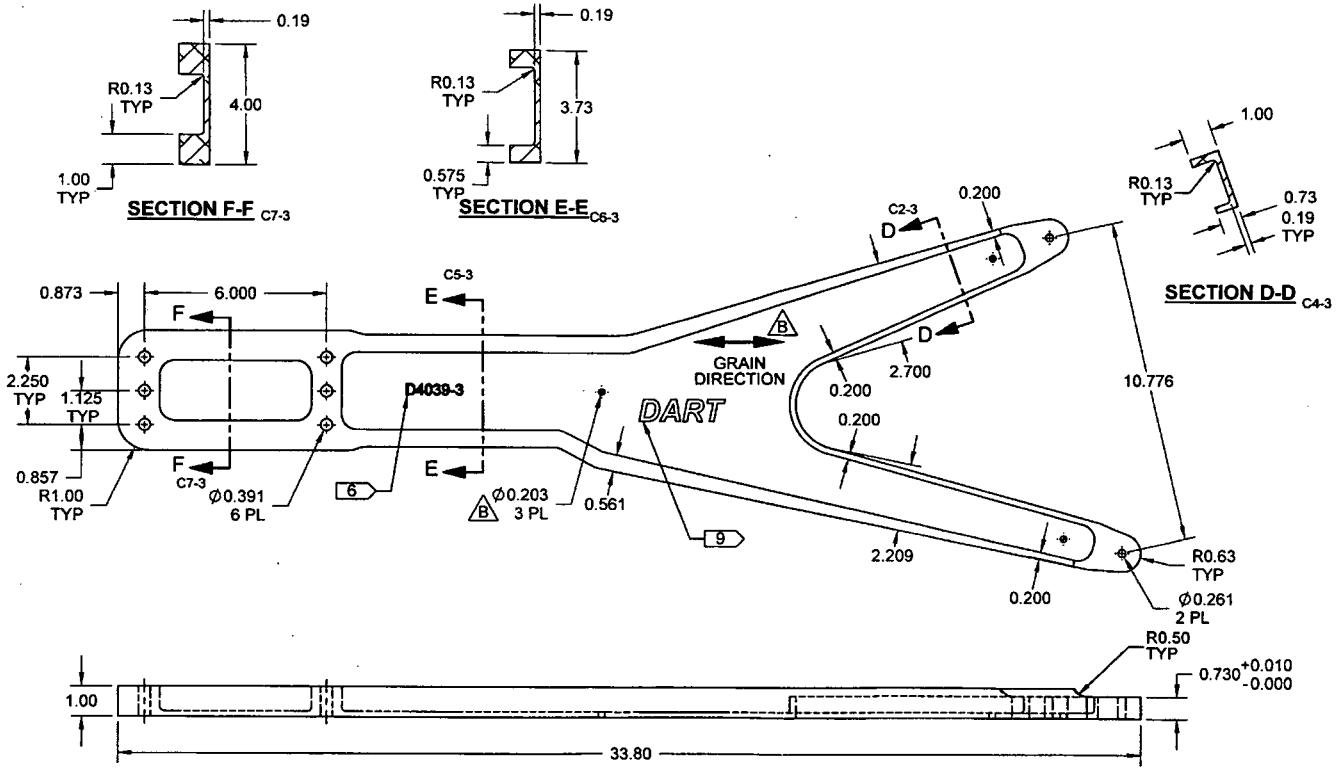

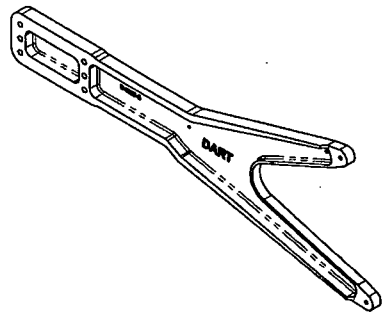

D4039-3 AFT BRACKET

RELEASED
2010 -09- 27

NOTES:
1) MATERIAL: 6061-T6/T62 ALUMINUM SHEET, 1.000 THICK
PER QQ-A-250/11 OR AMS-QQ-A-250/11
OR AMS 4025 OR AMS 4027
OR ASTM B209
REF DART SPEC M6061T6S1.000
2) FINISH: CHEMICAL CONVERSION COAT PER DART QSI 005 4.1
POWDER COAT "WHITE" (4.3.5.1) PER DART QSI 005 4.3
3) TOLERANCES: PER DART QSI 018 UNLESS OTHERWISE NOTED
4) UNITS: INCHES UNLESS OTHERWISE NOTED
5) BREAK SHARP EDGES: 0.005 TO 0.010 MAX
6) IDENTIFICATION: ENGRAVE P/N AND BATCH NUMBER IN THIS AREA TO MAX
DEPTH OF 0.010 WITH MIN TOOL RADIUS OF 0.010
7) WEIGHT: 6.23 lbs
8) MACHINE PER DART SOLIDWORKS PART "D4039-3_REVB.SLDPRT"
9) ENGRAVE DART LOGO IN THIS AREA TO MAX DEPTH OF 0.015 WITH MIN TOOL RADIUS OF 0.250

DESIGN		DART AEROSPACE LTD HAWKESBURY, ONTARIO, CANADA
DRAWN		
CHECKED		DRAWING NO. D4039 — REV. B — SHEET 3 OF 3
MFG. APPR.		
APPROVED		TITLE BRACKET — SCALE NTS
DE APPR.		
DATE 10.04.28		